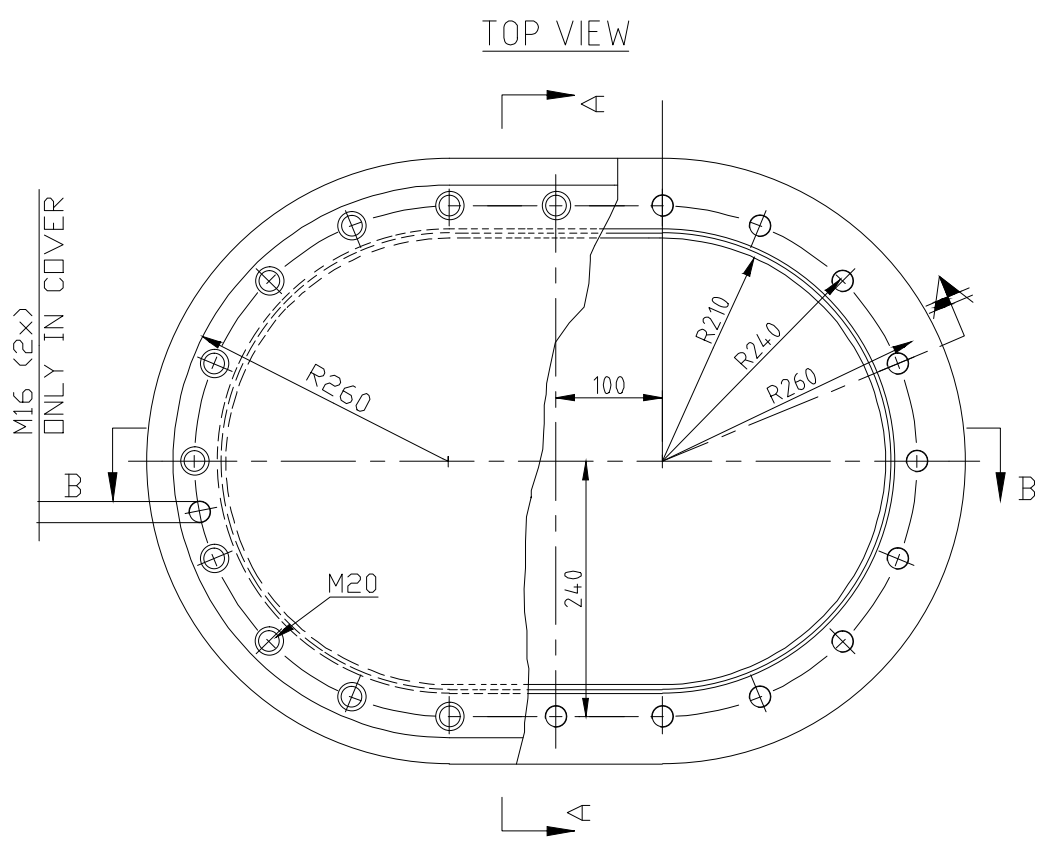

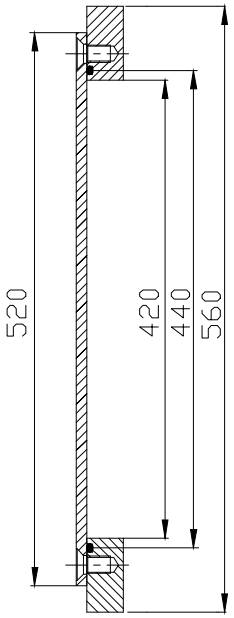

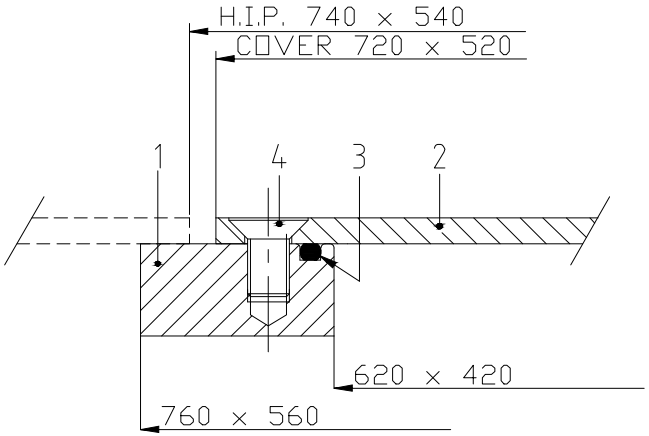

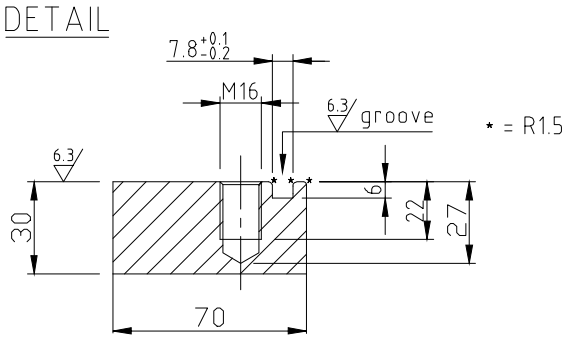

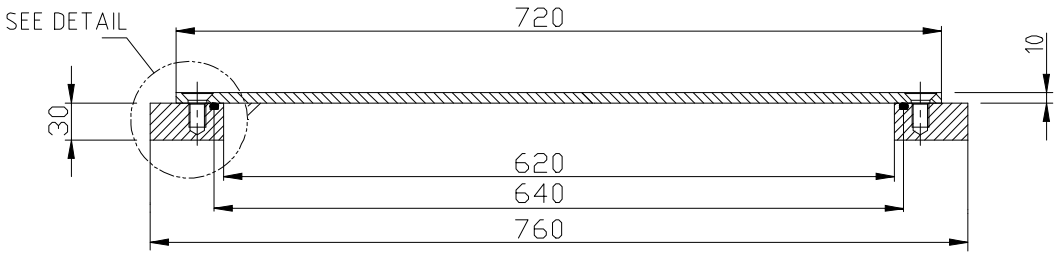

Subject: STEEL MANHOLE C/O 600x400 TYPE B - OVAL O-RING

Pos.	Qty.	Description	Material	Type/Drw. No.	Remarks
4	20	Bolt M16x30	Steel 8.8		Hot dipped galv.
3	1	O-ring 8mm	neoprene		
2	1	Manhole cover	Steel Grade A		
1	1	Manhole ring	Steel Grade A		

Schutte Metaal b.v.
Ampereweg 3 9503 GS Stadskanaal
telefoon 0599 620644 telfax 0599 617138

MH-B-600X400-20
O-RING FLUSH

Rev. –

Format A4

Drawn : E.S.
Date : 12-2-2010
Scale : 1:5 / 1:2